# 2 Block Dry Block Heaters

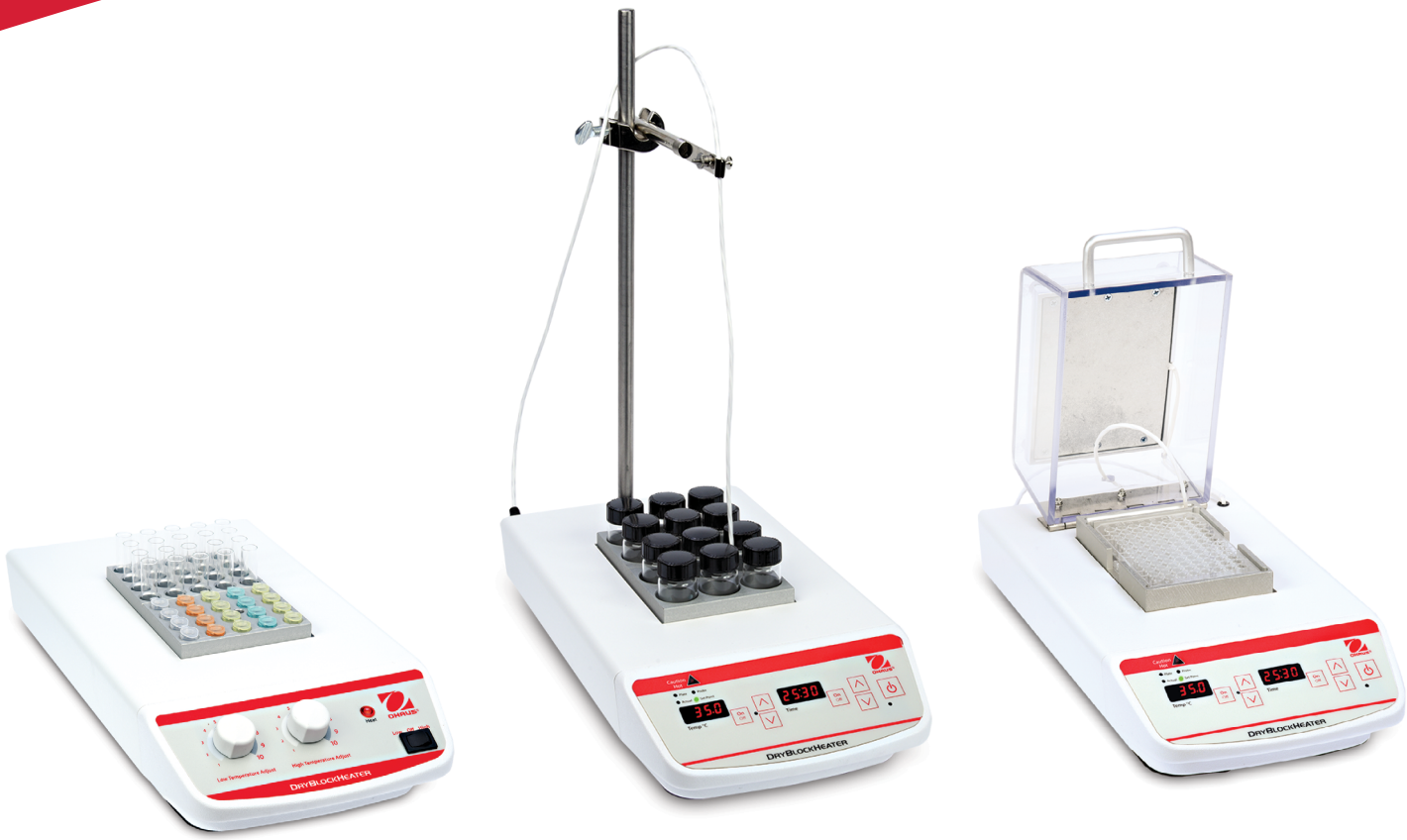

## *Versatile Block Heaters Designed for Everyday Use with Accessories for Every Application*

Versatile Dry Block Heaters are ideal for applications that require temperature stability. All units hold 2 optional interchangeable modular blocks with over 40 choices. Blocks are easy to use, no tools required. Close tube-to-block contact enables maximum heat retention, resulting in efficient heating. Digital models offer exceptional temperature uniformity and stability for repeatable results, while non-digital models are an economical choice.

### *Unique Features:*

- Three models to customize your application.  All models offer exceptional temperature uniformity with outstanding temperature stability.
- Avoid contamination to ensure repeatable, reliable results. The Heatblock with Heated Lid features a second heater in the lid to minimize condensation to maintain your sample integrity.
- Ensure temperature accuracy. Digital models include a unique single point calibration feature to match the block heater's display to a known external temperature standard for 3 temperature setpoints.

# 2 Block Dry Block Heaters

| Model | HB2AL | HB2DG | HB2DGHL |
|---|---|---|---|
| Control | Non-Digital | Digital | Digital (with heated lid) |
| Temperature Range | Low Ambient + 5 °C – 100 °C,<br>High 75 °C – 150 °C | Ambient + 5 °C – 120 °C | Ambient + 5 °C – 100 °C |
| Stability @ 37 °C | +/-1.5°C (120V)<br>+/-2°C (230V) | +/-0.1°C (120V)<br>+/-0.2°C (230V) | |
| Uniformity within the block @ 37 °C | +/-0.1°C (120V)<br>+/-0.4°C (230V) | +/-0.1°C (120V)<br>+/-0.2°C (230V) | +/-0.1°C (120V)<br>+/-0.1°C (230V) |
| Heat Up Time to 100 °C | ≤ 16 min | | ≤ 30 min |
| Temperature Calibration | NA | • | |
| Number of Blocks | 2 | | |
| Overshoot Protection | NA | 10 °C above set point | |
| Working Environment | 18 °C – 33 °C, 20% – 80% Relative humidity, non-condensing | | |
| Power | 230V, 0.92A, 50/60Hz | | 230V, 1.65A, 50/60Hz |
| Power Consumption | 210 W | | 400 W |
| Dimensions (W × L × H) | 203 × 391 × 89 mm | | 203 × 391 × 178 mm |
| Net Weight | 2.8 kg | | 3.1 kg |

## Other Standard Features and Equipment

Touchpad control and audible alarm (digital models), painted steel housing, digital models include support rod holder with locking knob, detachable 3-wire cord and plug (included)

## Compliance

- **Product Safety:** EN 61010-1, EN 61010-2-051
- **Electromagnetic Compatibility:** EN 61326-1 Class A, Industrial Environments
- **Compliance Marks:** CE; RCM; TÜV SÜD

## Accessories

**Module Block 10 mm Test Tube, 24 Wells** ..... 30400151
**Module Block 12/13 mm, 20 Wells** ..... 30400152
**Module Block 15/16 mm, 12 Wells*** ..... 30400153
**Module Block 20 mm Test Tube, 8 Wells***** ..... 30400154
**Module Block 25 mm Test Tube, 6 Wells***** ..... 30400155
**Module Block Combo - Test Tube Combination Block:**
**6 mm, 12/13 mm, 25 mm***** ..... 30400156
**Module Block 0.5 mL Microtaper, 30 Wells** ..... 30400157
**Module Block 6 mm Test Tube, 30 Wells** ..... 30400158
**Module Block 1.5 mL Microtaper, 20 Wells** ..... 30400159
**Module Block Solid** ..... 30400160
**Module Block Cuvette - 12 Cuvet, 2 Wells** ..... 30400161
**Module Block 11.5/1.5 mL Microcentrifuge, 20 Wells**
..... 30400162
**Module Block 250 Microliter/6 mm, 30 Wells** ..... 30400163
**Module Block Titer Plate** ..... 30400164
**Module Block 12/13 mm, 16 Wells** ..... 30400165
**Module Block Solid Double** ..... 30400166
**Module Block 35 mm Test Tube, 4 Wells***** ..... 30400167
**Module Block 50 mL Conical Centrifuge, 5 Wells***** ..... 30400168
**Module Block 0.2 mL Micro, 80 Wells** ..... 30400169
**Module Block 0.2 mL Micro, 64 Wells** ..... 30400170
**Module Block 0.2 mL 96 Hole Double Block** ..... 30400171
**Module Block 15 mL Conical Centrifuge, 12 Wells***** ..... 30400172
**Sand Bath, 2 Block Unit** ..... 30400174
**Sand, 0.5 kg Bag** ..... 30400177
**Stainless Steel Shot, 0.5 kg** ..... 30400178
**Cover Low-Temperature 2 Block*** ..... 30400179
**Module Block For Vials 12 mm, 20 Wells** ..... 30400182
**Module Block For Vials 15 mm, 20 Wells** ..... 30400183
**Module Block For Vials 17 mm, 12 Wells** ..... 30400184
**Module Block For Vials 19 mm, 12 Wells** ..... 30400185
**Module Block For Vials 21 mm, 9 Wells** ..... 30400186
**Module Block For Vials 23 mm, 8 Wells** ..... 30400187
**Module Block For Vials 25 mm, 8 Wells** ..... 30400188
**Module Block For Vials 28 mm, 6 Wells** ..... 30400189
**Module Block For Vials 16 mm, 15 Wells** ..... 30400190
**Module Block, 2.0 mL Tube, 20 Wells** ..... 30400191
**Module Block, 2.0 mL Corning Tube, 20 Wells** ..... 30400192
**Module Block Combo - Centrifuge Tube Configuration:**
**50 mL-2 Wells, 15 mL-3 Wells, 1.5 mL-4 Wells***** ..... 30400193
**Module Block Combo - Micro Tube Combination:**
**2 mL-5 Wells, 1.5 mL-10 Wells, 0.5 mL-6 Wells** ..... 30400194
**Module Block 17/18 mm, 12 Wells***** ..... 30400195
**Stainless Steel Probe Kit**** ..... 30400246

*NA for HB2DGHL
**NA for HB2AL
***Dry Block Heater HB2DGHL accommodates various tube sizes up to 85mm in height

## Dimensions

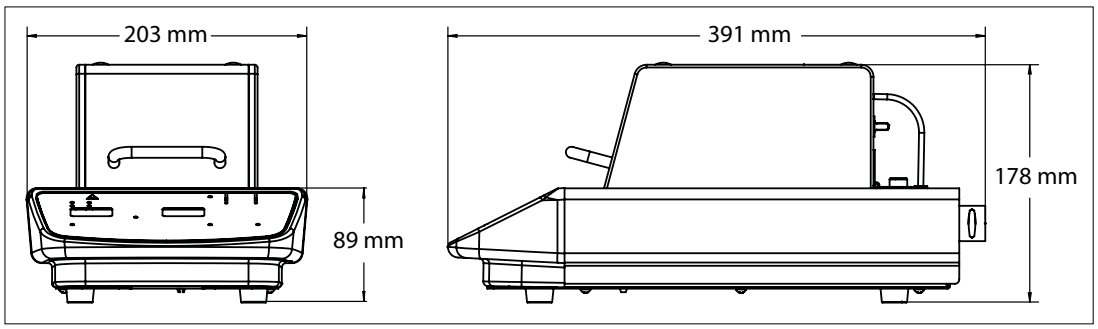


80775615_D 20250709 © Copyright OHAUS Corporation

**OHAUS Europe GmbH**

e-mail: ssc@ohaus.com
Tel: 0041 22 567 53 19
e-mail: tsc@ohaus.com
Tel: 0041 22 567 53 20

**www.ohaus.com**

*The management system governing the manufacture of this product is ISO 9001:2015 certified.*